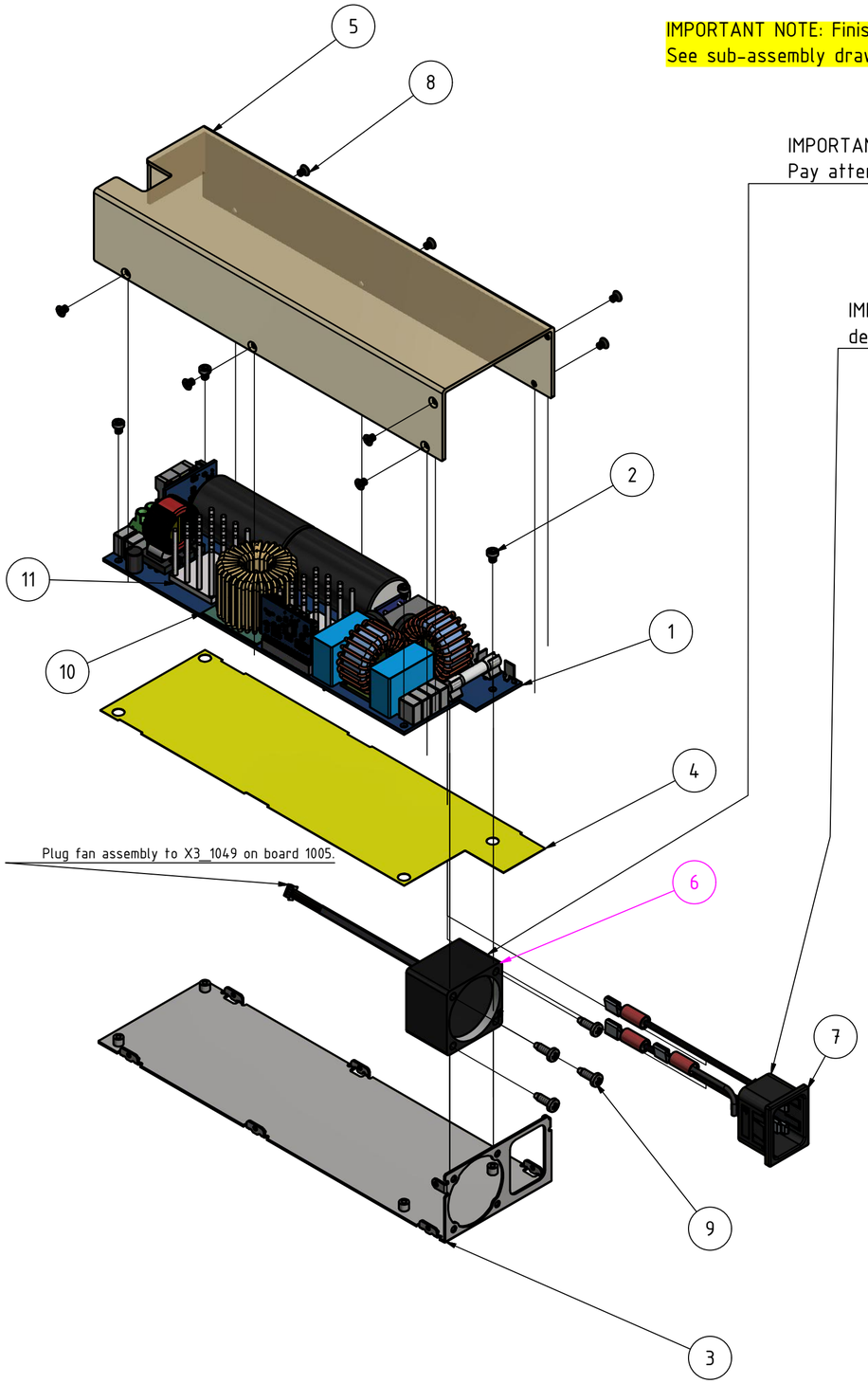

IMPORTANT NOTE: Finish all sub-assemblies first, before assembling the whole board!
See sub-assembly drawings!

IMPORTANT NOTE: The fan is vacuuming air out of the case assembly.
Pay attention to the arrows indicating the direction of the airflow.

IMPORTANT: Pay extra attention to the jumper wire assembly and the direction of cennections, described in the sub-assembly.

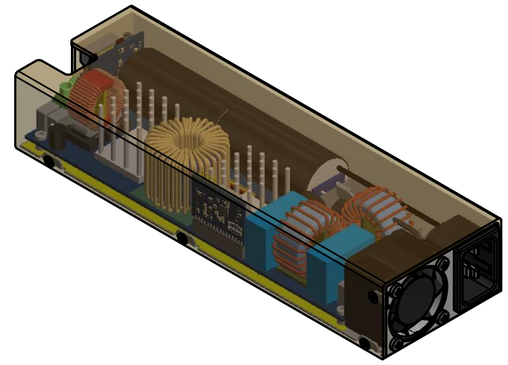

BILL OF COMPONENTS				
OBJECT	QUANTITY	DESCRIPTION	SUPPLIER	REFERENCE NO.
1	1	PCB BOARD ASSEMBLY		
2	4	M3x4 screw, cylinder head	Generic	
3	1	HO100002851 metal chassis		
4	1	IS100002850 Isolation foil		
5	1	CT100002850 Acrylic glass cover		
6	1	Fan assembly, see sub assembly drawing		
7	1	IEC AC Connector assembly, see sub-assembly drawing		
8	8	M3 x 4 screw, countersunk head	Generic	
9	4	AS B194 - Nr. 6 x 7/16-PR2 B	RS-Components	4828076
10	1	L3 choke assembly, see sub-assembly drawing IS200002850		
11	2	Heatsink assembly, see sub-assembly drawing		

Status	Änderungen	Datum	Name		Datum	Name
				Gezeichnet	11.03.2021	Wernegger
				Kontrolliert		
				Norm		

General assembly instructions

M100002854

1

A2